EE-434 Power Electronics

Engr. Dr. Hadeed Ahmed Sher

Ghulam Ishaq Khan Institute of Engineering Sciences and Technology
Topi 23460, Pakistan

hadeed@giki.edu.pk

March 28, 2019

Overview

1. Electronic switches
   - Insulated gate bipolar transistor(IGBT)
2. Power Computations
   - Example
3. Inductors and Capacitors
4. Energy recovery
   - Example
5. Effective values: RMS
   - Example

IGBT

Motivation

To design a product that has an easy control like MOSFET and low on state losses like BJT.

Invention

Designed and invented by B.Jayant Baliga in 80's.

IGBT | Symbols

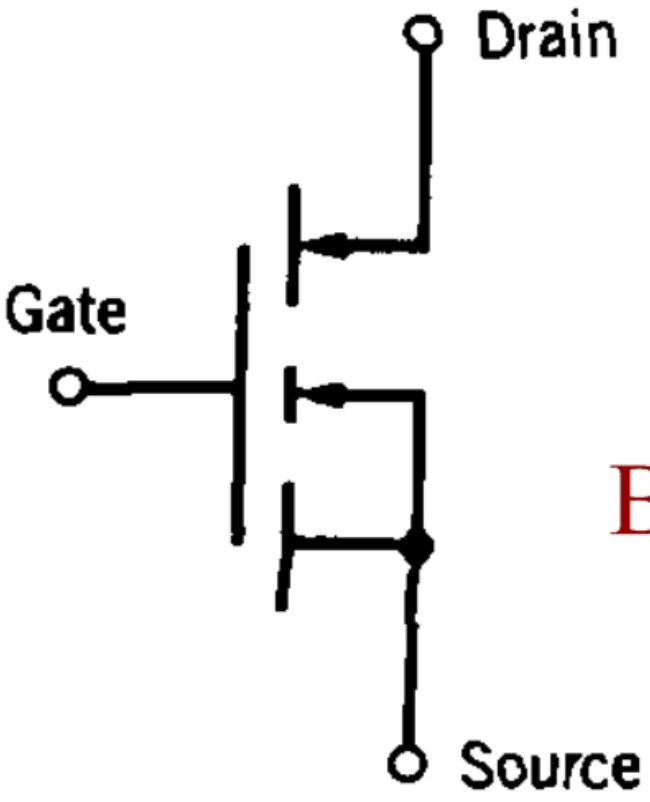

Both are used

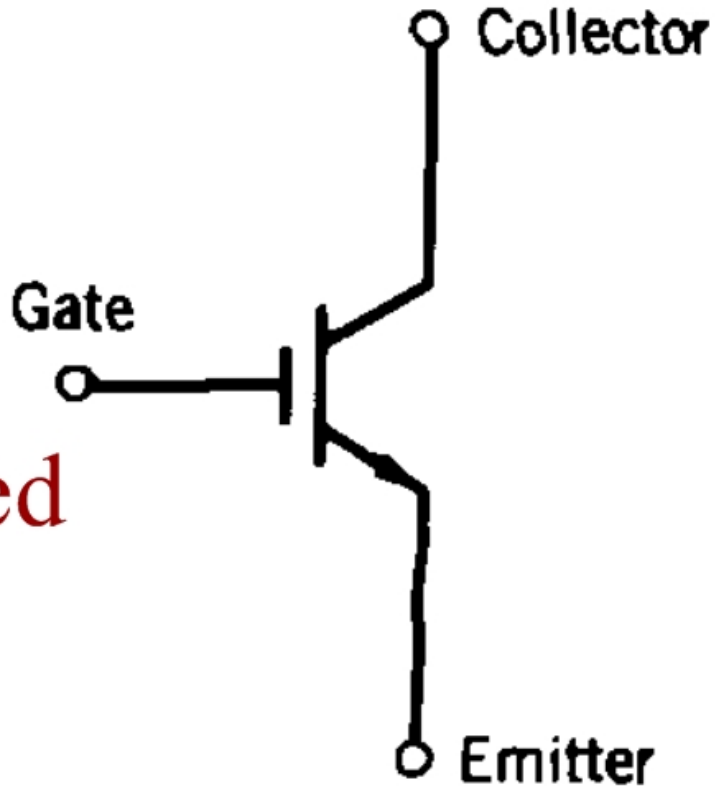

IGBT | Output characteristics

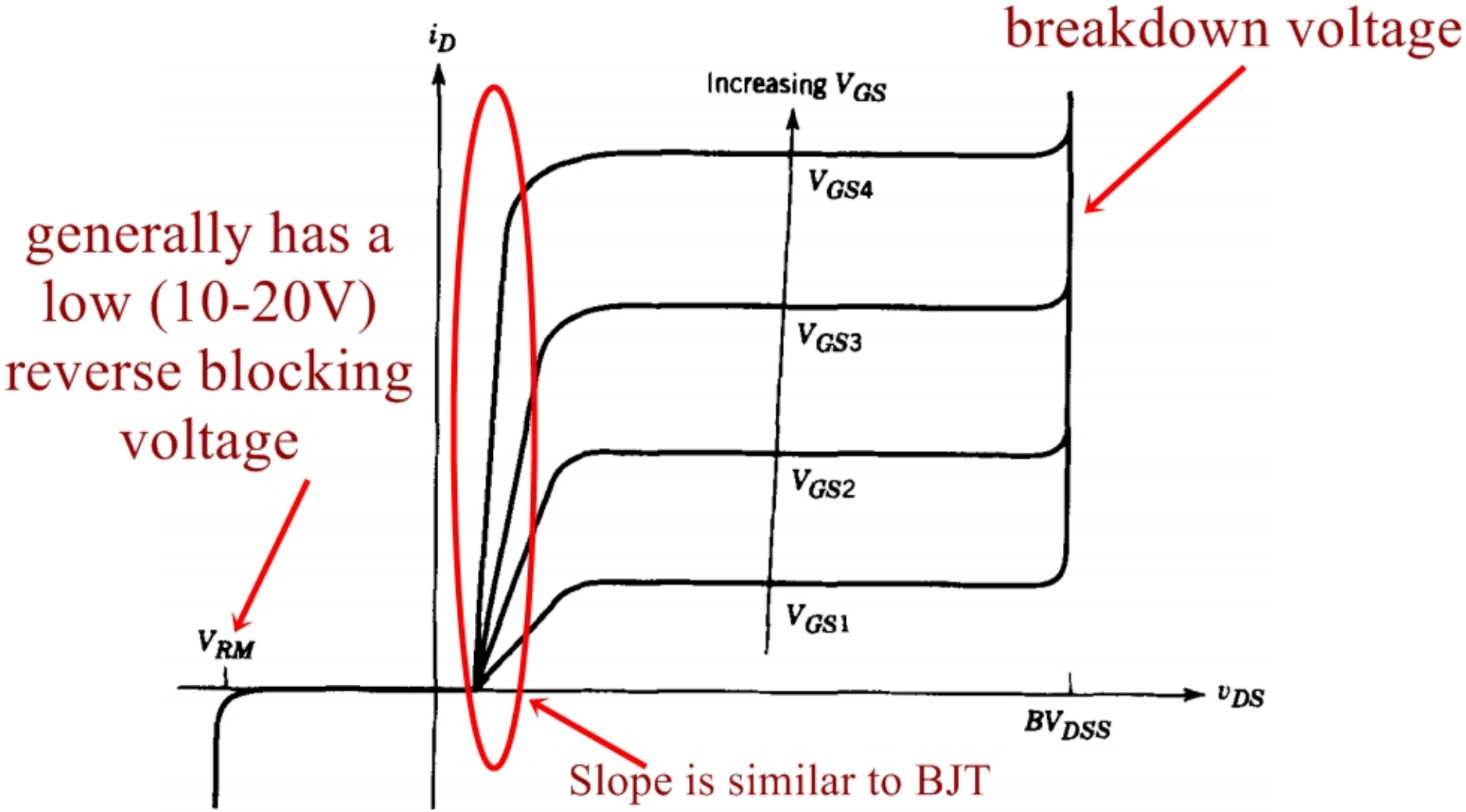

IGBT | Transfer characteristics

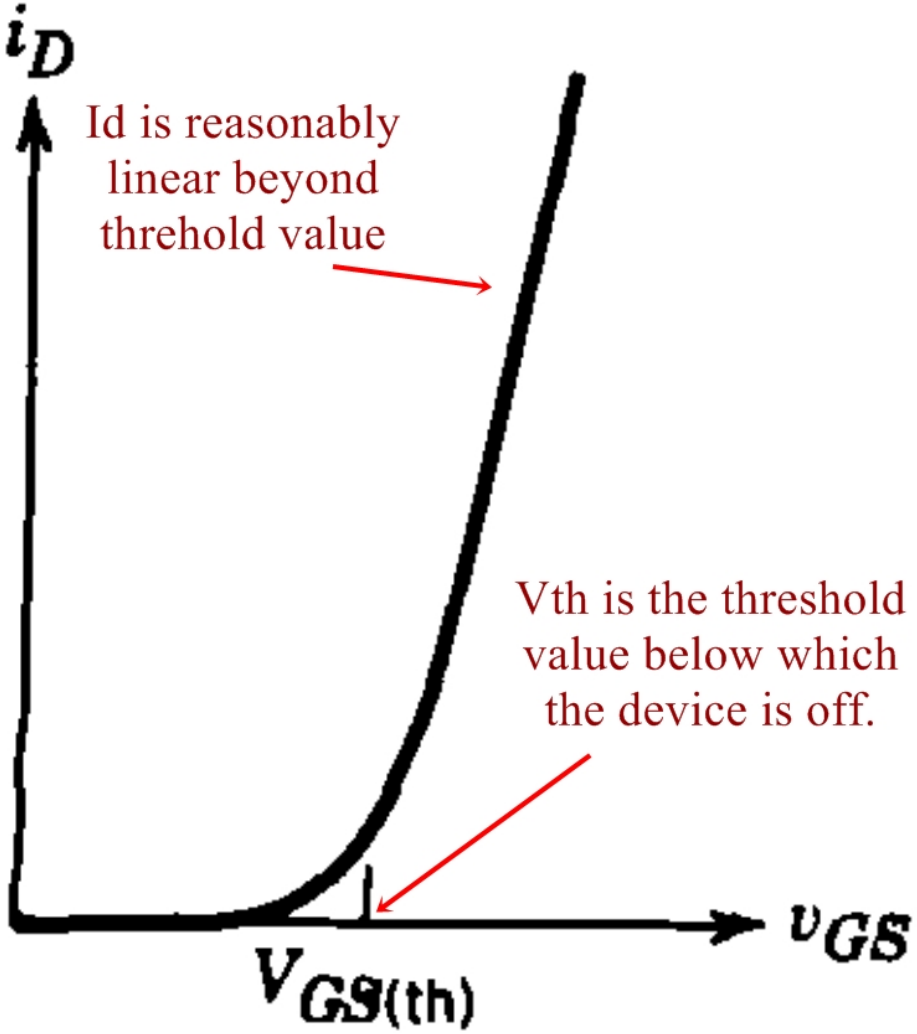

IGBT | Device operation

A gate to source voltage V_{GS} is used to control the device state. When the $V_{GS} > V_{GS(th)}$ the device conducts.

Comparison of electronic switches

Device	**Quadrant operation**	**Voltage blocking**	**Current flow**	Control	Remarks
Diode	1	Reverse	forward	No	
Thyristor	2	Both	forward	Yes	
Mosfet	2	Positive	Both	Yes	On state loss is higher than BJT
BJT				Yes	
IGBT				Yes	

Table: Summary of power electronic semiconductors

Power and Energy

Instantaneous power:
p(t)=v(t)i(t)
Using a passive sign convention, power is absorbed if power is positive and is supplied if negative.
Energy:
Energy is the integral of instantaneous power over time.
Average power:
It is the time average of p(t) over one or more periods. It can also be computed from energy per period.It is also called real power or active power.

$$P = \frac{1}{T}\int_{t_o}^{t_o+T} p(t)dt \tag{1}$$

also,

$$P = \frac{W}{T} \tag{2}$$

Example 2.1

For the waveform shown, determine the instantaneous power p(t), energy and average power.

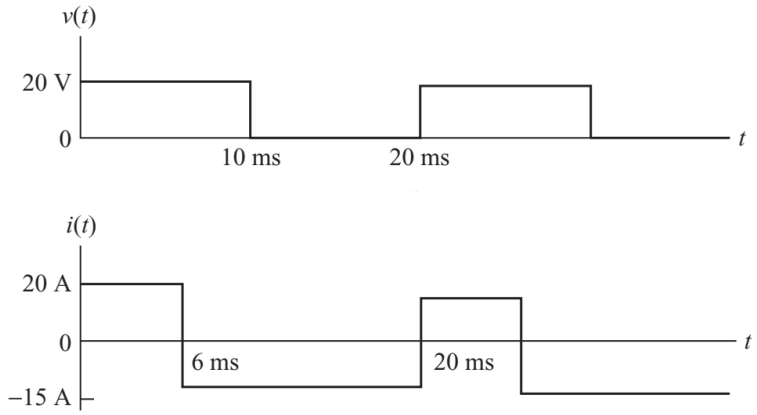

Solution:
Instantaneous power can be drawn by point to point multiplication.

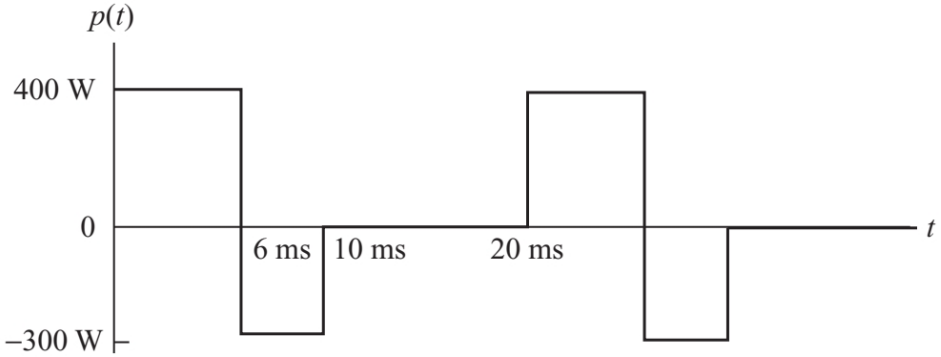

Example 2.1

Energy is determined by integrating power over one cycle.

$$W = \int_0^T p(t)dt = \int_0^{0.006} 400dt + \int_{0.006}^{0.010} -300dt + \int_{0.010}^{0.020} 0dt = 2.4 - 1.2 \tag{3}$$

Total 1.2J of energy is absorbed by the circuit.
Average power is determined as

$$P = \frac{1}{T}\int_0^T p(t)dt = \frac{W}{T} = 60W \tag{4}$$

Positive sign shows that power is absorbed by the element.

Power and Energy

In Power electronics a source may act as a sink and vice versa. For example, battery charging circuits, power supplies and motor control. Using the basic definitions of power

$$P_{dc} = V_{dc} \underbrace{\left[\frac{1}{T} \int_{t_0}^{t_0+T} i(t)dt \right]}_{\text{Current average}} \tag{5}$$

Therefore, average power absorbed by a dc **voltage source** is a product of dc voltage and average current.

$$P_{dc} = V_{dc} I_{avg} \tag{6}$$

Similarly, average power absorbed by a dc **current source** i(t)=I_{dc} is

$$P_{dc} = I_{dc} V_{avg} \tag{7}$$

Inductor

For periodic currents and voltages

$$i(t+T) = i(t) \tag{8}$$

$$v(t+T) = v(t) \tag{9}$$

For an inductor, the stored energy is

$$w(t) = \frac{1}{2}Li^2(t) \tag{10}$$

Rule 1

For periodic current, the **average** power absorbed by an inductor is zero for steady-state.

Inductor

The current voltage relationship of inductor is given as

$$i(t_0 + T) = \frac{1}{L}\int_{t_0}^{t_0+T} v_L(t)dt + i(t_0) \tag{11}$$

This can be rearranged as

$$i(t_0 + T) - i(t_0) = \frac{1}{L}\int_{t_0}^{t_0+T} v_L(t)dt = 0 \tag{12}$$

This is because the periodic current has same starting and ending value. Multiplying by L/T gives average voltage of inductor in one period.

$$avg[v_L(t)] = V_L = \frac{1}{T}\int_{t_0}^{t_0+T} v_L(t)dt = 0 \tag{13}$$

Rule 2

For periodic current, the **average** voltage across an inductor is zero for steady-state.

Example 2-2

The current in a 5-mH inductor is shown. Determine the voltage, instantaneous power, and average power for the inductor.
Solution: Voltage is computed as v(t)=L(di/dt) and the average inductor voltage is zero by inspection. Power is the product of voltage and current and it shows that when power is positive it absorbs power and when it is negative it supply power

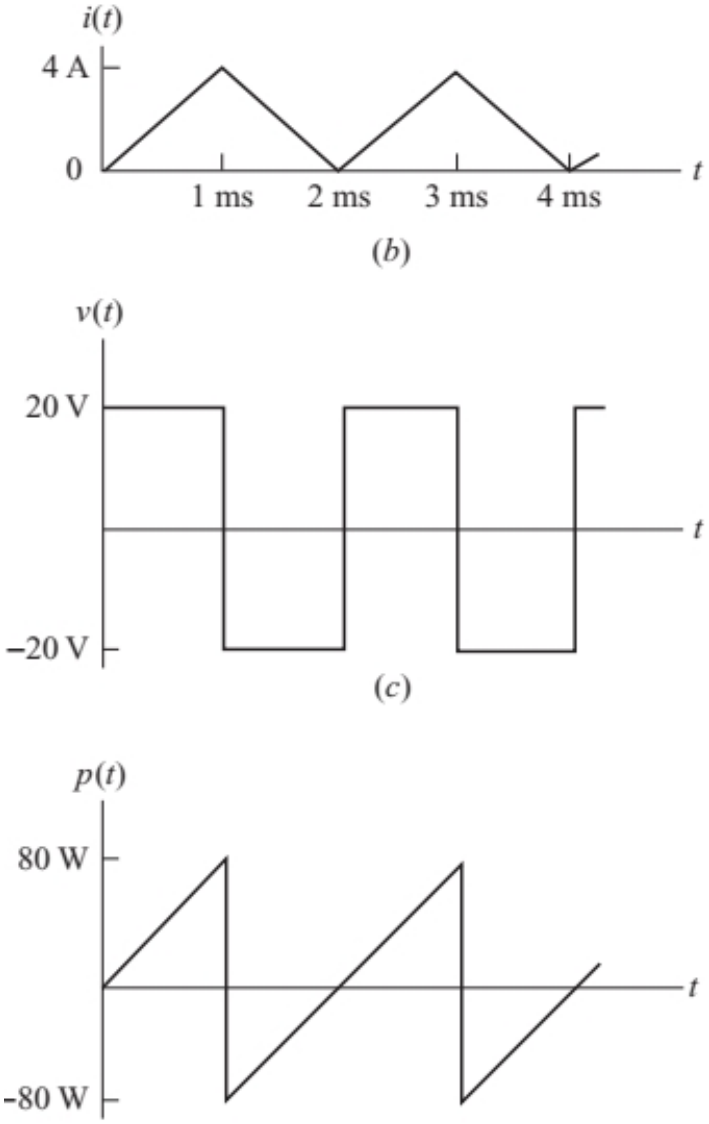

Capacitor

For periodic currents and voltages

$$i(t+T) = i(t) \tag{14}$$

$$v(t+T) = v(t) \tag{15}$$

For a capacitor, the stored energy is

$$w(t) = \frac{1}{2}Cv^2(t) \tag{16}$$

Rule 1

For periodic voltage, the **average** power absorbed by a capacitor is zero for steady-state.

Capacitor

The voltage current relationship of capacitor is given as

$$v(t_0 + T) = \frac{1}{C}\int_{t_0}^{t_0+T} i_C(t)dt + v(t_0) \tag{17}$$

This can be rearranged as

$$v(t_0 + T) - v(t_0) = \frac{1}{C}\int_{t_0}^{t_0+T} i_C(t)dt = 0 \tag{18}$$

This is because the periodic voltage has same starting and ending value. Multiplying by C/T gives average voltage of capacitor in one period.

$$avg[i_C(t)] = I_C = \frac{1}{T}\int_{t_0}^{t_0+T} i_C(t)dt = 0 \tag{19}$$

Rule 2

For periodic voltage, the **average** current in a capacitor is zero for steady-state.

Energy recovery

Inductors and capacitors in PE required energization and deenergization. For example consider the circuit shown

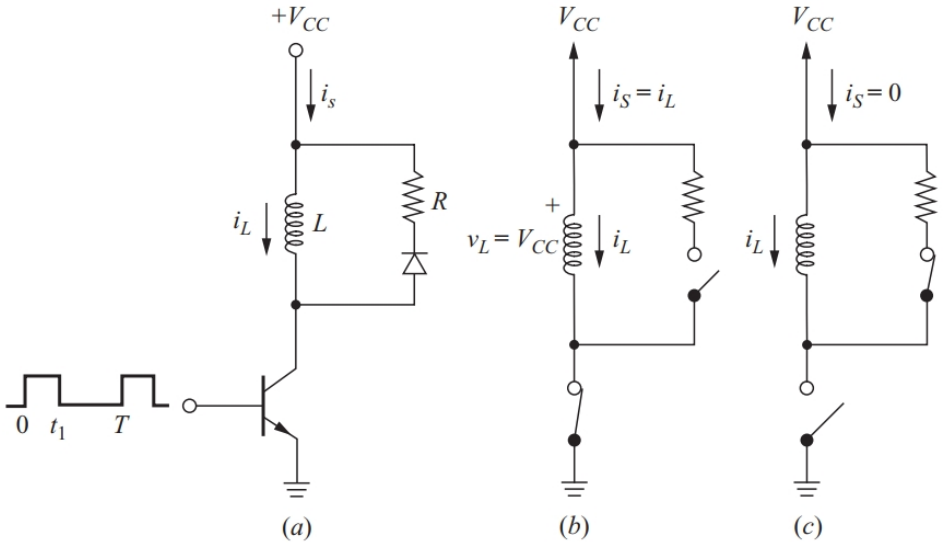

If the stored energy of inductor is not removed it can demage the switch. So a resistor and diode are connected in anti parallel direction with L. Circuit efficiency can be enhanced greatly if the trapped energy is fed to the load or the source. The analysis is based on two states; first with switch On and then switch off.

Energy recovery

Transistor on: $0 < t < t_1$
During this time the voltage across inductor is V_{cc} while the diode is reverse biased. Inductor current is given as

$$i_L(t) = \frac{1}{L}\int_0^t v_L(t)dt + i_L(0) = \frac{1}{L}\int_0^t V_{cc}dt + 0 = \frac{V_{cc}t}{L} \tag{20}$$

So current rises linearly.
Transistor off: $t_1 < t < T$
During this time the circuit behaves like a first order LC circuit. The initial current is calculated as

$$i_L(t_1) = \frac{V_{cc}t_1}{L} \tag{21}$$

The inductor current is given as follows. Here $\tau = \frac{L}{R}$

$$i_L(t) = i_L(t_1)e^{\frac{-(t-t_1)}{\tau}} = \left(\frac{V_{CC}t_1}{L}\right)e^{\frac{-(t-t_1)}{\tau}} \tag{22}$$

where, τ is the time constant.

Energy Recovery

Source current is zero when transistor is off,

$$i_s = 0 \tag{23}$$

Average power supplied by dc source is given as

$$P_S = V_S I_S = V_{cc}\left[\frac{1}{T}\int_{t_1}^{T} i_s(t)dt\right] \tag{24}$$

$$P_S = V_{cc}\left[\frac{1}{T}\int_{0}^{t_1} \frac{V_{cc}t}{L}dt + \frac{1}{T}\int_{t_1}^{T} 0dt\right] = \frac{(V_{cc}t_1)^2}{2LT} \tag{25}$$

Note that in an ideal inductor, transistor and a diode, the power absorbed is zero. Therefore, all the power is absorbed by the resistor i.e., $P_R = P_S$.

Energy Recovery

Another approach is to find the energy stored in inductor when the transistor was on.

$$W = \frac{1}{2}Li^2(t_1) = \frac{1}{2}L\left(\frac{V_{CC}t_1}{L}\right)^2 = \frac{(V_{CC}t_1)^2}{2L} \tag{26}$$

Because only resistor dissipates energy therefore, the energy stored by the inductor dissipates in resistor. Notice that this is the same expression as calculated in eq. (25).
In this circuit, the role of resistor is to protect the transistor. In fact, this circuit is a snubber circuit and it converts the energy into heat and is therefore not very efficient.

Energy recovery

One way of creating a lossless snubber device is to inject the stored energy back in the source.
Only possible if the source has a capability to sink.

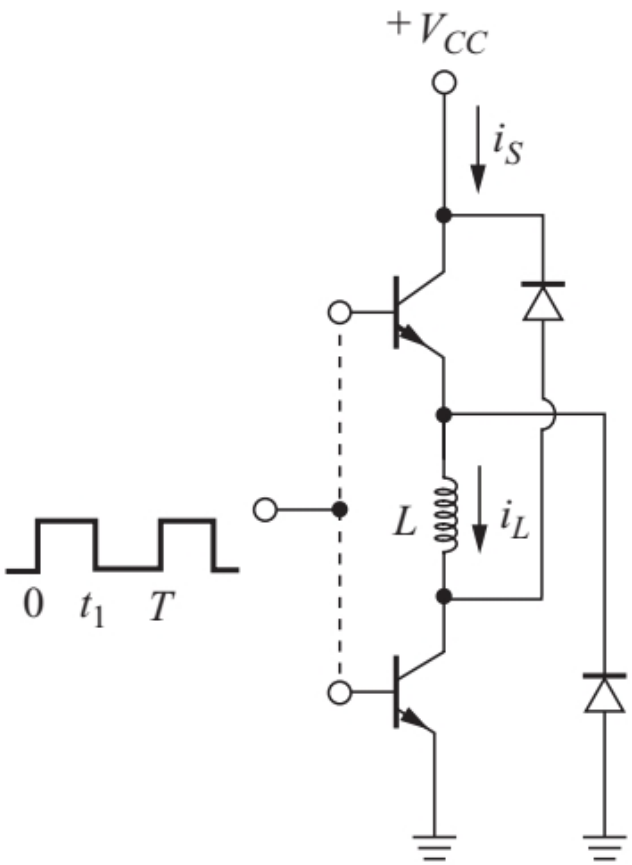

Both BJT are turned on and off simultaneously. When they are on, current flows through the inductance. When they are off, the inductor reverses its polarity and the diodes are forward biased. This means, that the energy stored in inductance is fed back into the dc voltage source. More detail is given in text books under "Double-ended forward converter topology"

Energy Recovery

As transistors are switch on and off simultaneously. Diode recovers the energy and feed it back to source. Assume t_0 is the turn on time and t_1 is the turn off time.

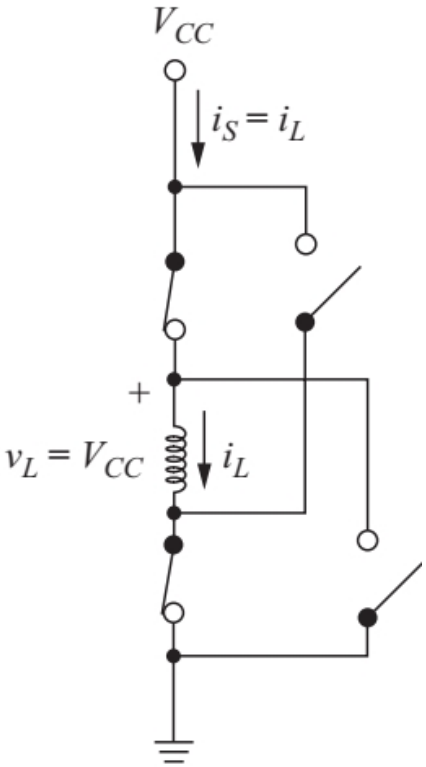

Transistor on: $0 < t < t_1$
When transistors are on, didoes are reverse biased and $V_L = V_{CC}$.
Inductor current is given as

$$i_L(t) = \frac{1}{L}\int_0^t V_{CC}dt + 0 = \frac{V_{CC}t}{L} \tag{27}$$

Because the circuit is an inductive circuit therefore, inductor and off course the source current increases linearly with the slope $\frac{V_{CC}t}{L}$.

Energy Recovery

Transistor off: $t_1 < t < T$

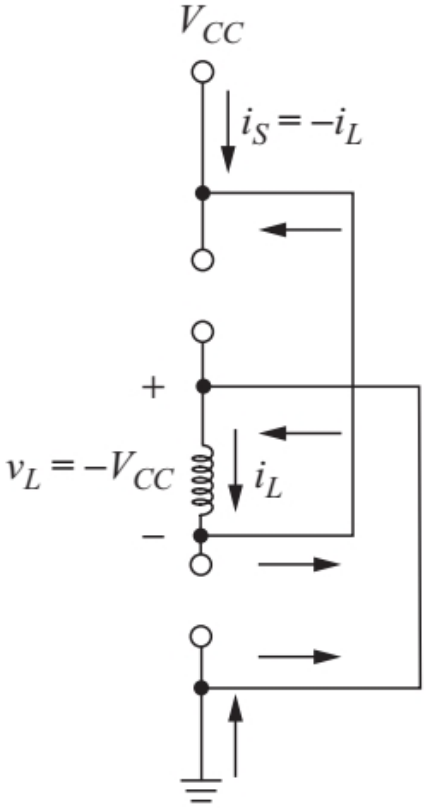

When transistors are turned off, the diodes provide a path for the inductor current.

$V_L = -V_{CC}$

Inductor current is given as

$$i_L(t) = \frac{1}{L}\int_{t_1}^{t} V_L dt + i_L(t_1) \quad (28)$$

$$= \frac{1}{L}\int_{t_1}^{t} (-V_{CC}dt + \frac{V_{CC}t_1}{L}) \quad (29)$$

$$= \left(\frac{V_{CC}}{L}\right)[(t_1 - t) + t_1] \quad (30)$$

$$i_L(t) = \left(\frac{V_{CC}}{L}\right)(2t_1 - t) \quad (31)$$

Inductor current becomes zero at t=$2t_1$, the time at which the diodes turn off. Source current is negative when absorbing power.

Example 2-3

The circuit shown has V_{CC}=90V,L=200 mH, R=20Ω, t_1=10 ms, and T=100 ms. Determine (a) the peak current and peak energy storage in the inductor,(b) the average power absorbed by the resistor, and (c) the peak and average power supplied by the source. (d) Compare the results with what would happen if the inductor were energized using the lossless snubber circuit discussed previously.

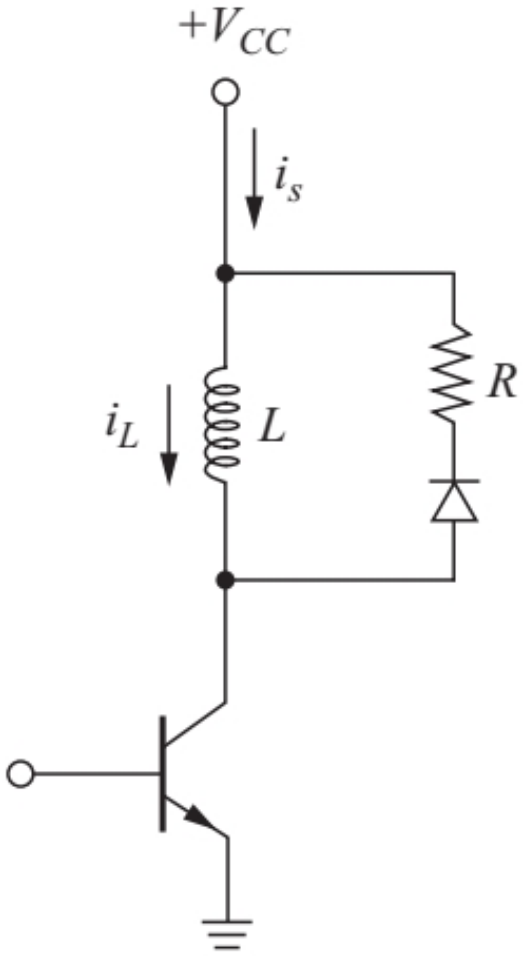

Example 2-3

(a):

$$i_L(t) = \left(\frac{V - CC}{L}\right)t = 450t \tag{32}$$

Peak inductor current is

$$i_L(t_1) = 450(0.01) = 4.5A \tag{33}$$

Peak stored energy is

$$W_L = \frac{1}{2}Li^1(t_1) = 2.025J \tag{34}$$

b) The time constant of the circuit is $\tau = \frac{L}{R}$=10ms.
Switch off time is 10 time constants, therefore, all the stored energy is transferred to the resistor.

$$W_R = W_L = 2.025J \tag{35}$$

Average power absorbed by the resistor is

$$P_R = \frac{W_R}{T} = \frac{2.025J}{0.1s} = 20.25W \tag{36}$$

Example 2-3

(c):Power supplied by the source is only for on time

$$p_s(t) = v_s(t)i_s(t) = (90V)(450tA) \tag{37}$$

i.e., $p_s(t) == 40,500tW$.
At t=10ms, the maximum value is 405W. Average power is

$$P_S = \frac{1}{T}\int_0^T p_s(t)dt \tag{38}$$

$$P_S = \frac{1}{0.1}\left(\int_0^{0.01} 40,500tdt + 0\right) \tag{39}$$

P_S=20.25W

Another method to calculate the source power is to find the average triangular source current over one period and then multiply it with V_{CC}.

$$I_S = \frac{1}{2}\left[\frac{(0.01s)(4.5A)}{0.1s}\right] = 0.225A \tag{40}$$

Average source power is

$$P_S = V_{CC}I_S = (90)(0.225) = 20.25W \tag{41}$$

Example 2-3

(d)If the circuit shown below is used then

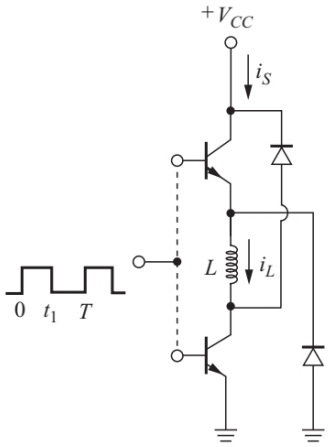

$$i_L(t) = \begin{cases} 450t & 0 < t < 10ms \\ 9 - 450t & 10ms < t < 20ms \\ 0 & 20ms < t < 100ms \end{cases} \tag{42}$$

Source current is

$$i_S(t) = \begin{cases} 450t & 0 < t < 10ms \\ 450t - 9 & 10ms < t < 20ms \\ 0 & 20ms < t < 100ms \end{cases} \tag{43}$$

inductor current is given by eq.(20) and (31). Average source current is zero and so is power.

Instantaneous power is

$$p_S(t) = 90 i_S(t) \begin{cases} 40,500t & 0 < t < 10ms \\ 40,500t - 810W & 10ms < t < 20ms \\ 0 & 20ms < t < 100ms \end{cases} \tag{44}$$

PSIM Simulation

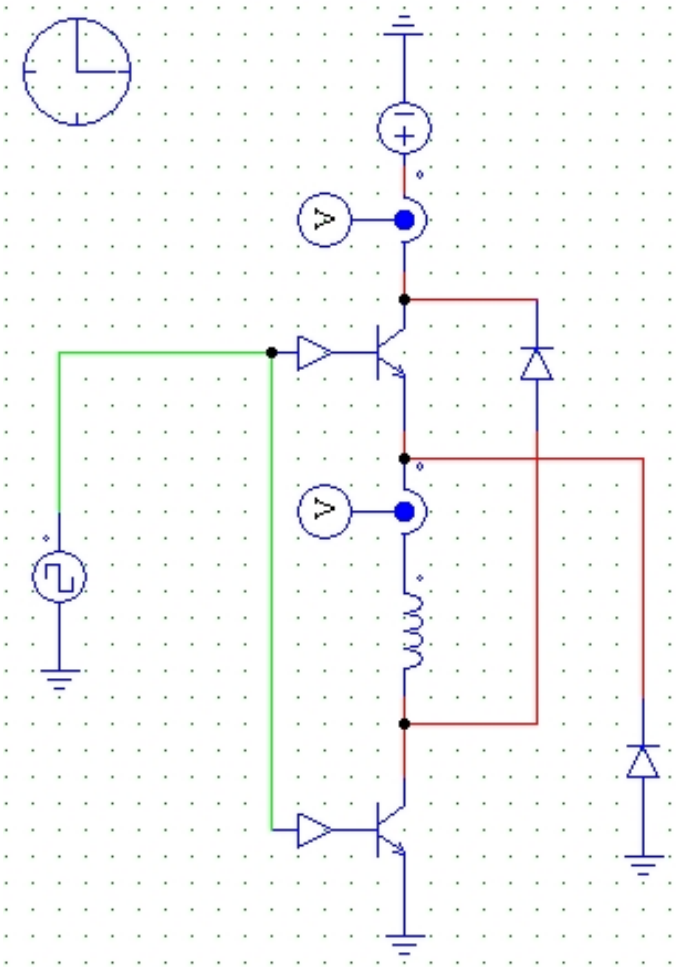

Figure: Inductor current, Source current

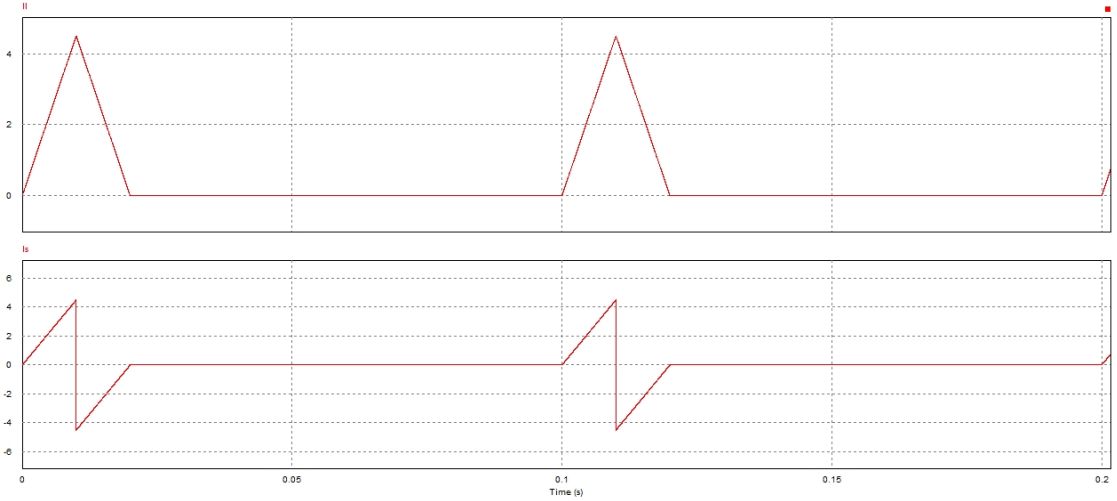

Figure: Inductor current, Source current

RMS value

Root mean square (rms) is the effective value of a periodic waveform that behaves like an equivalent dc value. For a dc voltage, average power delivered to a resistor is

$$P = \frac{V_{dc}^2}{R} \tag{45}$$

For a periodic voltage, effective/rms voltage is computed using the expression of power and average resistor power.

$$P = \frac{V_{eff}^2}{R} \tag{46}$$

Computing average resistor power

$$P = \frac{1}{T}\int_0^T p(t)dt = \frac{1}{T}\int_0^T \frac{v^2(t)}{R}dt \tag{47}$$

RMS value

Thus, average power is

$$P = \frac{V_{eff}^2}{R} = \frac{1}{R}\left[\frac{1}{T}\int_0^T v^2(t)dt\right] \tag{48}$$

thus,

$$V_{eff}^2 = \frac{1}{T}\int_0^T v^2(t)dt \tag{49}$$

Therefore,

$$V_{eff} = V_{rms} = \sqrt{\frac{1}{T}\int_0^T v^2(t)dt} \tag{50}$$

Similarly, for current

$$I_{eff} = I_{rms} = \sqrt{\frac{1}{T}\int_0^T i^2(t)dt} \tag{51}$$

Example 2-4

Determine the rms value of the periodic waveform shown.

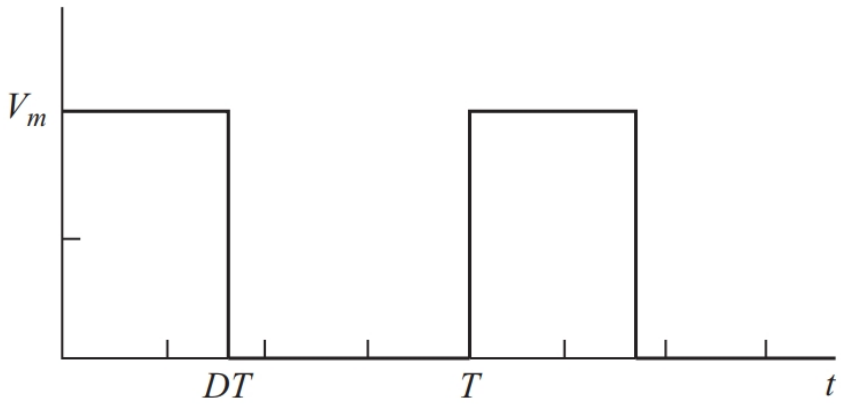

Sol:

$$v(t) = \begin{cases} V_m & 0 < t < DT \\ 0 & DT < t < T \end{cases} \tag{52}$$

using (47)

$$V_{rms} = \sqrt{\frac{1}{T}\int_0^T v^2(t)dt} = \sqrt{\frac{1}{T}(V_m^2 DT)} \tag{53}$$

$$V_{rms} = V_m\sqrt{D} \tag{54}$$

Example 2-5

Determine the rms value of a) v(t)=$V_m sin(\omega t)$ b) full wave rectified sine wave v(t)=$|V_m sin(\omega t)|$ c)half wave rectified sine wave of v(t)=$V_m sin(\omega t)$ for $0 < t < T/2$ and zero otherwise.
Sol: a) using (50)

$$V_{rms} = \sqrt{\frac{1}{2\pi}\int_0^{2\pi} V_m^2 sin^2(\omega t) d(\omega t)} = \frac{V_m}{\sqrt{2}} \tag{55}$$

Notice that rms value is independent of frequency.

Example 2-5

Sol: b) using (50) the expression can be obtained. However, rms formula uses the integral of square of function which is identical to the rectified full wave sine wave. So the rms value is the same.

$$V_{rms} = \frac{V_m}{\sqrt{2}} \tag{56}$$

c) using (50)

$$V_{rms} = \sqrt{\frac{1}{2\pi}\left(\int_0^{\pi} V_m^2 sin^2(\omega t) d(\omega t) + \int_{\pi}^{2\pi} 0^2 d(\omega t)\right)} \tag{57}$$

Solving this

$$V_{rms} = \frac{V_m}{2} \tag{58}$$